USB3.0 4K USB Camera Module Specifications

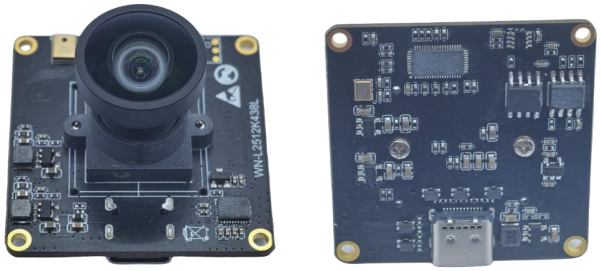

I. Main Parameters

Product Name	USB3.0 4K Camera Module
Product Code	WN-L25I2K438L
Module Size	PCB: 38mmx38mmx28.34mm
Image Sensor	1/2.5-inch IMX274 CMOS Sensor
Max. Resolution	3840H*2160V
Pixel Size	1.62*1.62μm
Output Format	YUV2, MJPEG
Field of View	D 112° x H 100°x V 80° (or TBD)
Focus Mode	Fixed Focus/ Manual Focus
Shutter Mode	Electronic Rolling Shutter
Lens	EFL:2.8mm F/No.2.4 4G+2P IR 650MM
Interface	Type C USB 3.0
Output & Power Supply	High Speed USB3.0
Controllable Parameters	Brightness, Contrast, Saturation, Hue, Sharpness, Gain, Gamma, White Balance, Backlight Contrast, Exposure
Supported OS	UVC-compliant, Plug and Play for Windows10, Windows11,Android, Linux etc.
Connection Cable	Default 1.5 Meter USB Cable

2. Resolutions and Frame Rates

Resolutions	Frame Rates				
	MJPG	YUY2	/	/	/
3840*2160 4k	30FPS	15FPS	/	/	/
2560*1440 2k	30FPS	30FPS	/	/	/
2592*1944 5MP	30FPS	30FPS	/	/	/
2048*1536 3MP	30FPS	30FPS	/	/	/
1600*1200 2MP	30FPS	30FPS	/	/	/
1920*1080 1080P	30FPS	30FPS	/	/	/
1280*720 720P	30FPS	30FPS	/	/	/
640*480 VGA	30FPS	30FPS	/	/	/

3. Working Conditions

Working Voltage	DC 5V
Working Current	230mA
Working Temperature	-15°C ~ 60°C
Storage Temperature	-20°C ~ 85°C
Humidity	80 ~85%

4. Shape and Dimensions (Unit: mm)

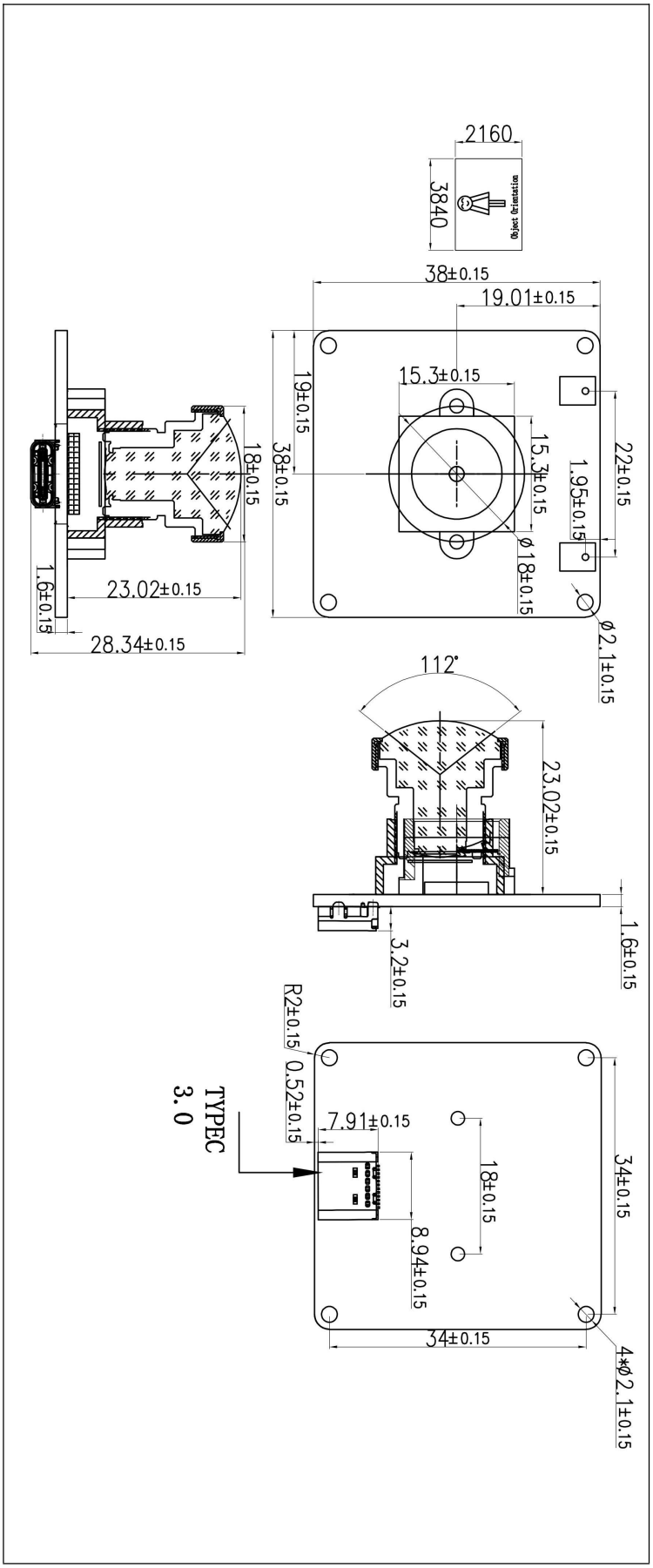

Shenzhen Weinan Electronics Co.,Ltd.
Building 2, Baoke Industrial Park, Longhua, Shenzhen, Guangdong, China
Tel: +86 0755 27526467
E-mail: camera@weinanelectronics.com
https://www.weinanelectronics.com